干式单板电磁离合器 CDF0S6AA/CDF1S5AA/CDF2S5AA/CDF005AA/CDF010AA/CDF020AA/CDF040AA/CD-F-40
实验设备电磁离合器、喷雾头设备电磁离合器、打包机电磁离合器 CD-F-0.6/CD-F-1.5/CD-F-2.5/CD-F-5/CD-F-10/CD-F-20
新型号 CDF0S6AP/CDF0S6AO/CDF0S6AN/CDF1S5AK/CDF1S5AL/CDF1S5AJ/CDF2S5AI/CDF2S5AM/CDF2S5AN
CDF2S5AL/CDF005AG/CDF005AH/CDF010AH/CDF010AG/CDF020AC/CDF020AD/CDF020AE/CDF040AC
仟岱总代理 13710967244 **余彦泽** http://www.chaintail.com.cn

乾式單板電磁離合器-法蘭固定型 Electromagnetic Power-Applied Friction Clutch - Flange Mounted

CDF Series

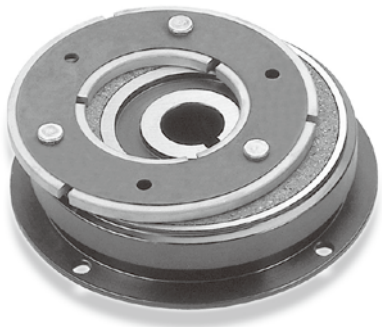

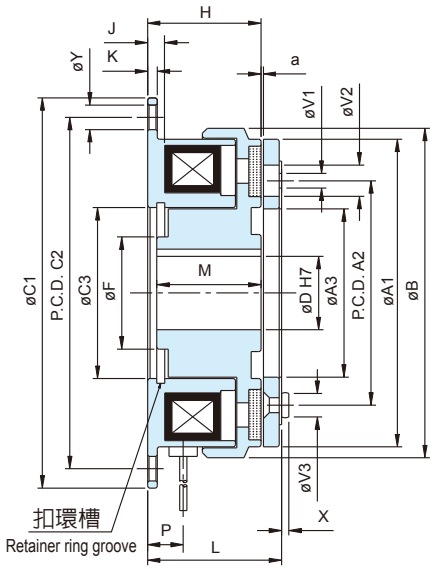

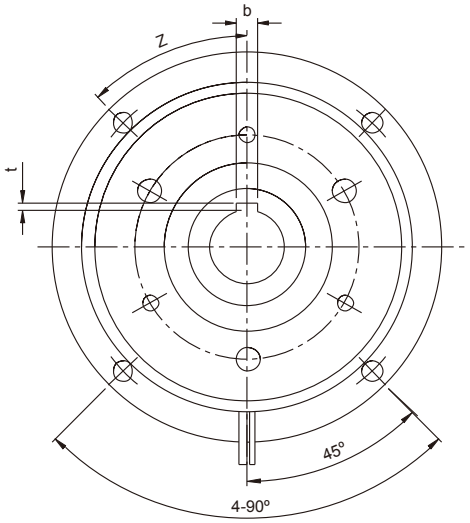

型 號 MODEL		CDF0S6AA(AB)	CDF1S5AA(AB)	CDF2S5AA(AB)	CDF005AA(AB)	CDF010AA(AB)	CDF020AA(AB)	CDF040AA(AB)
靜 摩 擦 轉 距 Static Friction Torque	[kgm](Nm)	0.55 (5.5)	1.1 (11)	2.2 (22)	4.5 (45)	9 (90)	17.5 (175)	35 (350)
動 摩 擦 轉 距 Dynamic Friction Torque	[kgm](Nm)	0.5 (5.0)	1.0 (10)	2.0 (20)	4 (40)	8 (80)	16 (160)	32 (320)
功率 Power	[24V](W) at 20°C	11	15	20	25	35	45	60
徑方向 Radius	A1	63	80	100	125	160	200	250
	A2	46	60	76	95	120	158	210
	A3	34.5	41.8	52	62	80	99.5	125
	B	67.5	85	106	133	169	212.5	264
	C1	80	100	125	150	190	230	290
	C2	72	90	112	137	175	215	270
	C3	35	42	52	62	80	100	125
	D	15(12)	20(15)	25(20)	30(25)	40(30)	50(40)	60(50)
	F	23(21)	28	40	45	62	77	100
	V1	3-3.1	3-4.1	3-5.1	3-6.1	3-8.1	3-10.2	4-12.2
	V2	3-6.3	3-8	3-12	3-12.5	3-15	3-17.3	4-20.8
	V3	3-6	3-6	3-7.5	3-9.8	3-13	3-18	4-23
	Y	5	6	7	7	9.5	9.5	11.5
	Z	6-60°						8-45°
軸方向 Shaft	H	24	26.5	30	33.5	37.5	44	51
	J	3.5	4.3	5	5.5	6	7	7.85
	K	2	2.5	3	3.5	4	5	6
	L	28.05	31.3	35.9	40.5	47	56.2	64.47
	M	22	24.1	27	30	33	40.15	47.15
	P	7.5	9.5	8.9	9.5	9.5	10.5	15.5
	X	1.5	1.4	1.7	2	2.5	5.7	6.4
	a	0.2 (±0.05)			0.3 ($^{+0.05}_{-0.1}$)		0.5 ($^{0}_{-0.2}$)	
	b	5 (4)	5 (5)	7 (5)	7 (7)	10 (7)	12 (10)	15 (12)
	t	2.3 (1.8)	2.3 (2.3)	3.3 (2.3)	3.3(3.3)	3.8 (3.3)	3.8 (3.8)	5.3 (3.8)
重量 Weight	(kg)	0.46	0.83	1.5	2.76	5.1	9.3	17
保護素子 Protective device		07D470K	07D470K		10D680K	14D680K		20D680K