5位數LCD型顯示錶(無電源式)(24X48mm)
(5 DIGITAL LCD MONITORS (SELF-POWER),24x48mm)

MODEL MA24-L

■特點(FEATURES)

- 精確度0.1%滿刻度 ±1位數(Accuracy 0.1% F.S. ±1digit)
- 顯示範圍-19999~99999可任意規劃(Programmable rate -19999 to 99999 digit)
- 可直接量測直流電流/直流電壓,無需另接輔助電源 (Self-power,measuring DCA/DCV)
- 尺寸小(24x48x50mm),穩定性高(Dimension small (24x48x50mm) and High stability)
- 分離式端子,配線容易(Discrote terminal,conmector easy)
- CE 認證(CE EMC certification)

1.MODEL:MA24-L □ □□
(選購型號)

NO	Input Type	NO	DCV	NO	DCV	NO	DCA	NO	DCA
A	DC	11	0~50mV	15	0~54V	21	0~20.000uA	25	0~200.00mA
		12	0~5V	16	0~110V	22	0~200.00uA	26	0~2.000A
		13	0~10V	17	0~600V	23	0~2.0000mA	27	0~5.000A
		14	0~36V	19	SPECIFIED	24	0~20.000mA	29	SPECIFIED

2.SPECIFICATION (主要規格)

- Aux.power supply (輔助電源) : None
- Measuring accuracy (range) (精 確 度) (23 ±5°C): 0.1% F.S. ±1 digit(1~100%F.S.)
- Input resistance (輸入阻抗) : >100Mohm(<2V range)
  >2Mohm(<2V range)
  < 0.25VA(current ranges)
  < 1000Vrms(>54V ranges)
- Maximun input (最大過載能力) : < 150Vrms(<54V ranges)
  < max.2 x rated(<99.999mA)
  < max.2 x rated(>99.999mA)
- ADC resolution (類比轉數位解析度) : 15.7 bits
- Sampling time (取樣時間) : 2.5 cycles/sec.
- Readout range (顯示值範圍) : -19999 - 99999 digit adjustable
- Zero (offset) range (歸零調整範圍) : -999~999 digit adjustable
- Span(scale) range (最大值調整範圍) : -999~999 digit adjustable
- Over input indication (過載顯示) : " doFL " or "-doFL"
- Polarity display (極性顯示) : " → " for negative readings
- Display (顯示幕) : 7-segment LCD charactor high 8.6mm (.338")
- Temp. coefficient (溫度係數) : 50ppm/°C (0-50°C)
- Battery life (電池壽命) : 7 year min.with continuous input at 25°C
- Parameter setting (參數設定方式) : Touch switches
- Memory mode (記憶型式) : Non-volatile E^2 PROM memory
- Case material (外殼材料) : ABS
- Dielectric strength (絕緣耐壓能力) : 2KVac/1 min. (input/case)
- Operating condition (使用環境條件) : 0-50°C(20 to 90% RH non-condensed)
- Storage condition (存放環境條件) : 0-70°C(20 to 90% RH non-condensed)
- Outside dimension (外型尺寸) : 24x48x50mm
- CE EMC Certification (CE認證) : EN 55022:1998/A1:2000 Class A
  EN 61000-3-2:2000
  EN 61000-3-3:1995/A1:2001
  EN 55024:1998/A1:2001
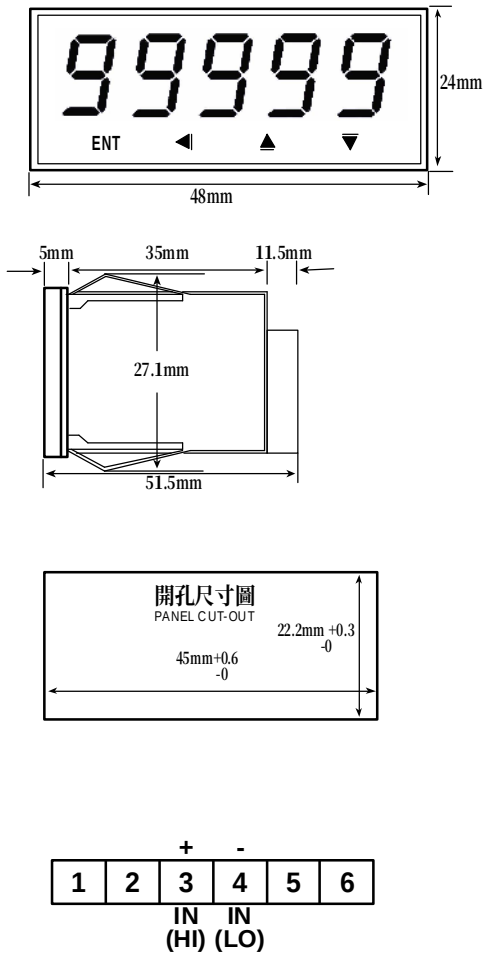
3.OUTSIDE DIMENSION AND CONNECTION DIAGRAM
(外型尺寸與開孔尺寸與配線圖)